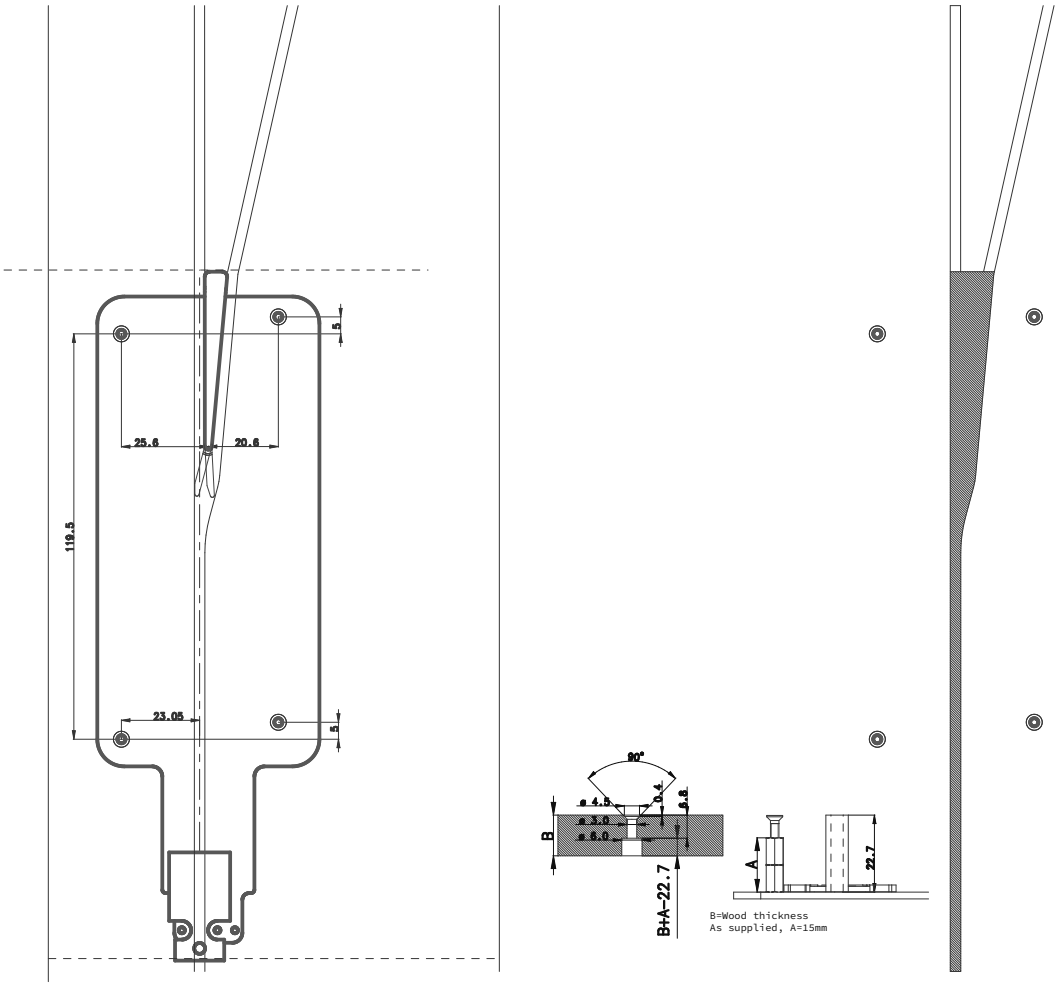
5
25.6
20.6
119.5
23.05
5
90°
ø 4.5
0.4
8.8
ø 3.0
ø 6.0
B
B+A-22.7
A
22.7
B=Wood thickness
As supplied, A=15mm

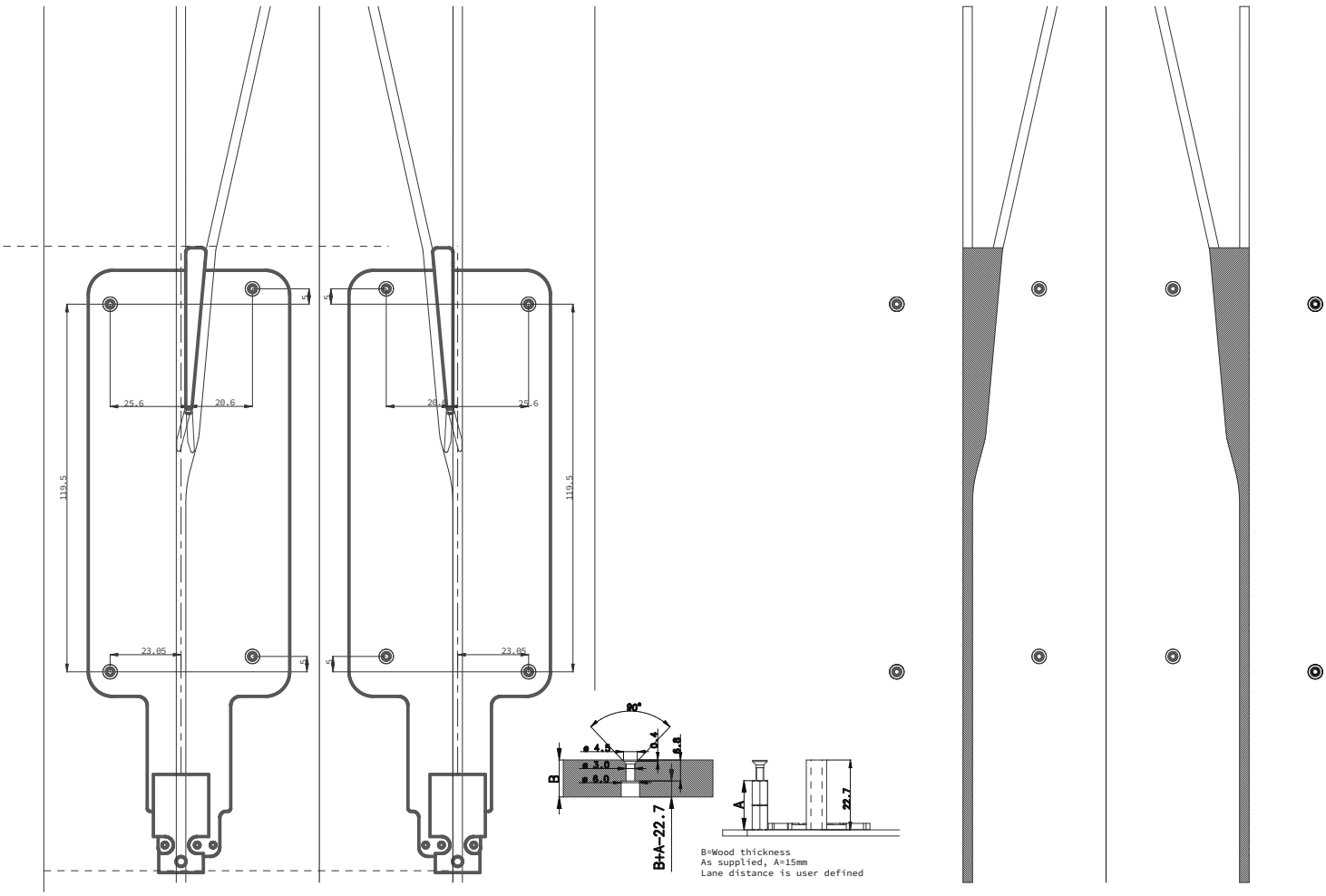
5
25.6
20.6
119.5
23.05
5
20.6
25.6
119.5
23.05
90°
ø 4.5
0.4
8.8
ø 3.0
ø 6.0
B
B+A-22.7
A
22.7
B=Wood thickness
As supplied, A=15mm
Lane distance is user defined